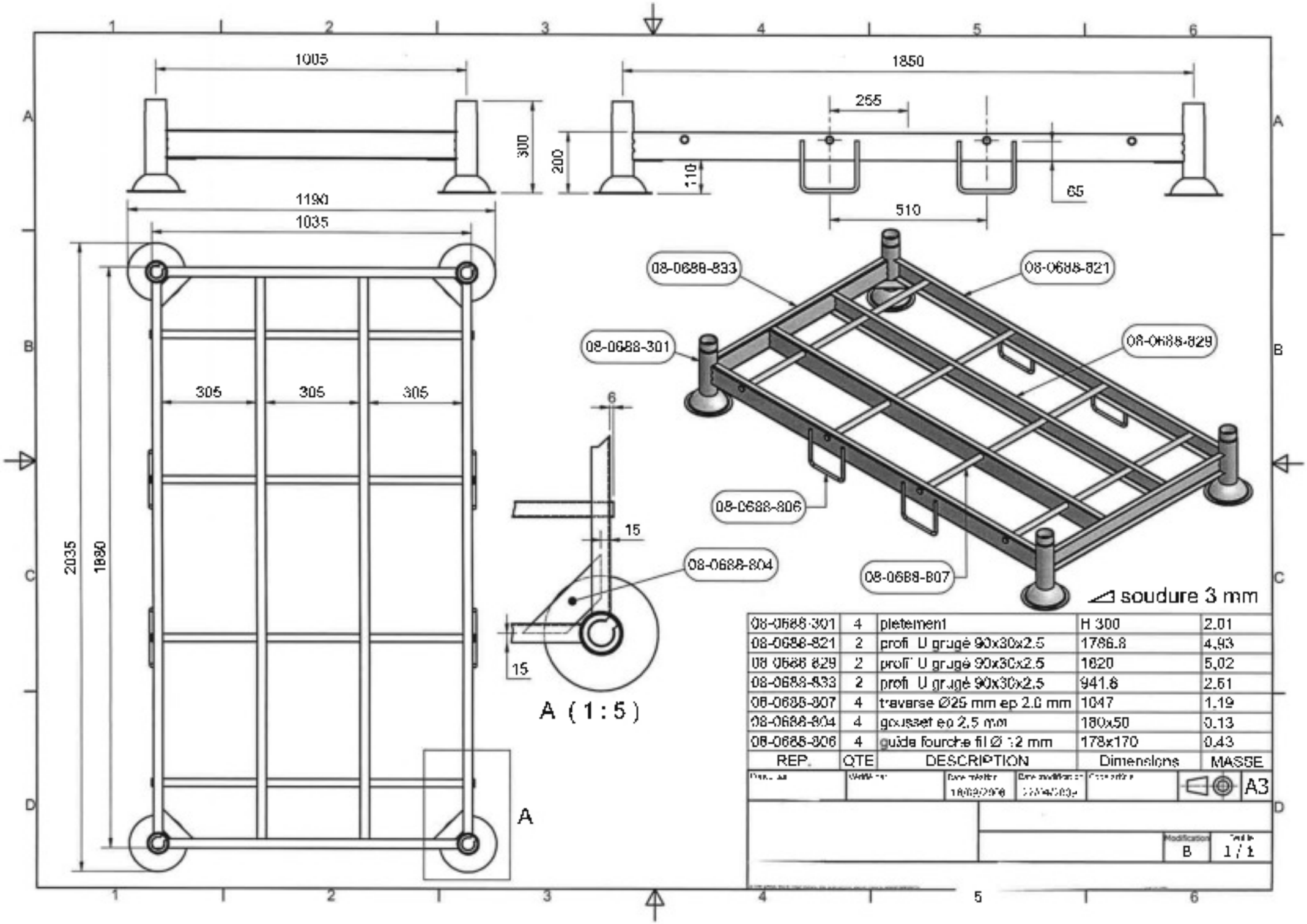

REP.	QTE	DESCRIPTION	Dimensions	MASSE
08-0688-301	4	pietement1	H 300	2.01
08-0688-821	2	profi U grugé 90x30x2.5	1786.8	4,93
08-0688-829	2	profi U grugé 90x30x2.5	1820	5,02
08-0688-833	2	profi U grugé 90x30x2.5	941.6	2.61
08-0688-807	4	traverse Ø25 mm ep 2.0 mm	1047	1.19
08-0688-804	4	gousset ep 2,5 mm	180x50	0.13
08-0688-806	4	guide fourche fil Ø 12 mm	178x170	0.43